DATA SHEET

© NATIONAL MODEL RAILROAD ASSOCIATION

Return to index

Sheet #:	**D6b.2**
Title:	**TRESTLE DECK SYSTEMS**
Reformated:	**October 1999**
Originally Compiled by:	**Ray Snow**
Drawings by:	**M.E. Raferty (D6b.1)**
First Issued:	**November 1951**
Page:	**1 of 4**

OPEN DECKS

Stringers require sound lumber, in all long lengths as possible. Timber sizes vary from 7"x14" to 10"x18", varying with span (panel length) and loading and number of stringers. The stringers extend over at least two spans and are from 20 to 32 feet long.

Guard Timbers (or spacer timbers) are 5"x8" or 8"x8" timbers placed near the end of the ties, far enough out so that derailed trucks will not strike them. They were sometimes notched about an inch into the ties to act as tie spacers. Modern fast tracks use metal connectors (invisible externally) between timber and tie, because of the tendency of the timber to break off between daps (notches).

Bridge Ties are 8"x8" x 10'-0" placed on 12" centers, for all loadings. Note that standard rail ties are used in ballasted deck construction, while the oversize bridge ties are used for open decks.

Guard Rails are placed about ten inches inside the running rail to keep derailed cars on the trestle. They should extend 50 feet beyond the trestle on tangent, further on curves or fast track. The ends are brought to the center of the track and beveled or bent down. A "Jordan" guard may be used, consisting of three equidistant parallel rails between the main rails, their ends being bent down and passed through holes in a plate at the end of the deck so as to not catch any broken or dragging parts. These rails form a skidway upon which the car or engine slides if it will not roll.

Corbels were used in older construction. They are short timbers placed between stringer and cap, to increase bearing and confine the stringers, and sometimes for superelevation.

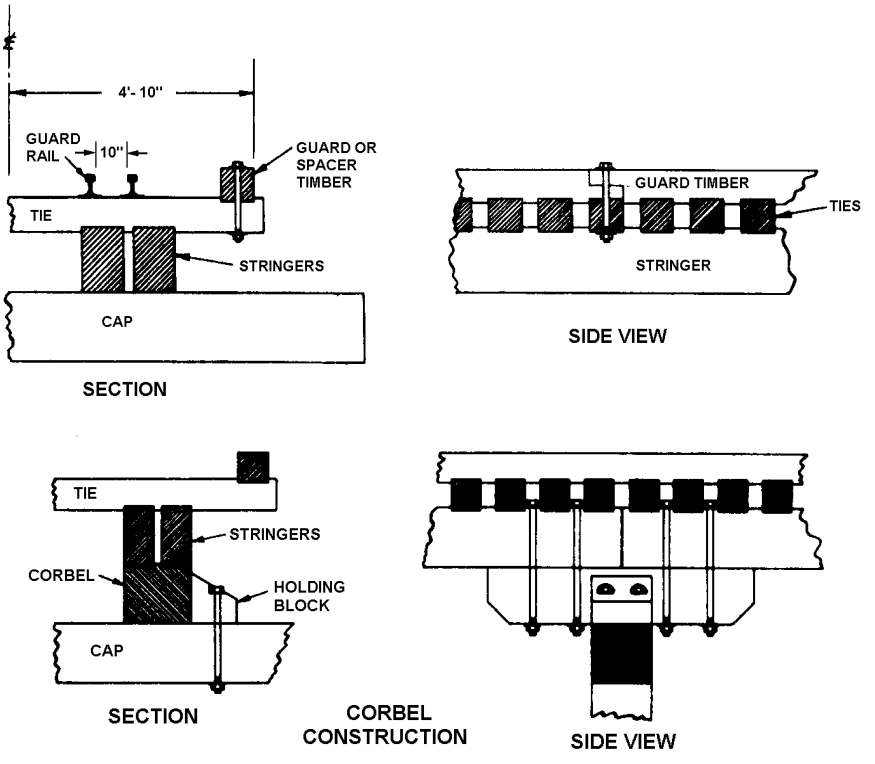

SIZE AND NUMBER OF STRINGERS

Type of Deck	Size of Stringer (In.)	10' Span E45	10' Span E60	10' Span E72	12' Span E45	12' Span E60	12' Span E72	14' Span E45	14' Span E60	14' Span E72	16' Span E45	16' Span E60	16' Span E72
Open Decks	7x16	6	8	8	8	8							
	8x16	4	6	6	6	6	8	8	8				
	9x16	4	4	6	6	6	8	6	8		8		
	10x16	4	4	4	4	4	6	6	8	8	8		
	9x18	4	4	4	4	4	6	6	6	8	8	8	
	10x18						4	4	6	6	6	8	
	10x20							4	4	6	6	6	8
Ballasted Decks	7x14					12	14						
	7x16					10	12		14				
	8x16					9	12		11	13			
	10x16					8	10		10	11		14	14
	9x18					8	8		10	11		12	13
	10x18						8		8	9		11	12

BALLASTED DECKS

Open deck construction has cheaper first cost than a ballasted deck, is more adaptable to variations in design necessitated by unusual terrain, and is cheaper to renew. The ballasted deck is less susceptible than the open deck, to fire damage, has better track riding qualities, better appearance, renders better overload service if necessary, and is easier than open deck to maintain. Stringers are discussed above. The floor may be 4"x10" x 14'-0" planks, with 4"x8" or 8"x8" ballast retainers. Over 6" to 9" of ballast is placed under standard rail ties.

WALKS AND PLATFORMS

Three types of structure appear on trestle decks. They are refuge platforms, and their attendant walks, barrel platforms, and track car platforms. Refuge platforms are spaced at least every hundred feet, and are particularly important on high structures. The train crew walkways leading to the refuges may be on one or both sides of the trestle. They are built up of four 2"x10" planks resting on every fifth tie, which has been made longer than the others in order to support the walkway. Sometimes outriggers are spaced between every fifth tie, instead of using long ties. Handrails of 2"x6" timbers or 2" pipe on 4"x6" posts may be used.

A platform holding a barrel of water and buckets should be placed on every wooden structure over fifty feet long. An additional barrel is needed for each one hundred and fifty feet of additional length. For creosoted structures, sand is more efficacious than water as a fire fighting element, so that sand boxes are sometimes found substituted for water barrels.

The track car platform is similar to the other platforms, but considerably larger. The deck area around the vicinity of these platforms is usually planked to permit men and cars to be maneuvered from track to platform.

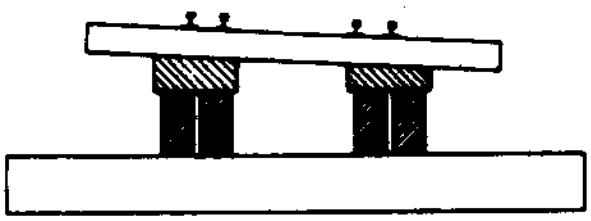

Blocks Above Stringers

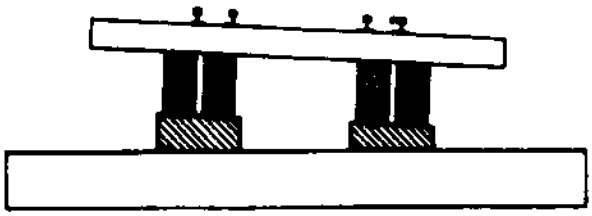

Blocks Below Stringers

SUPERELEVATION

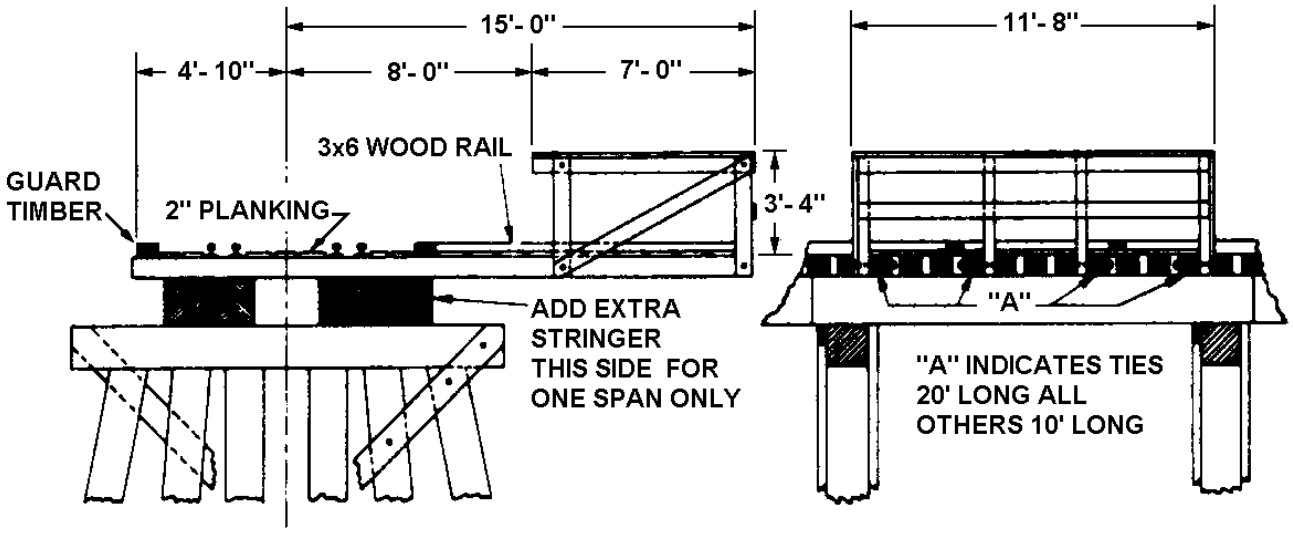

TRACK CAR PLATFORM

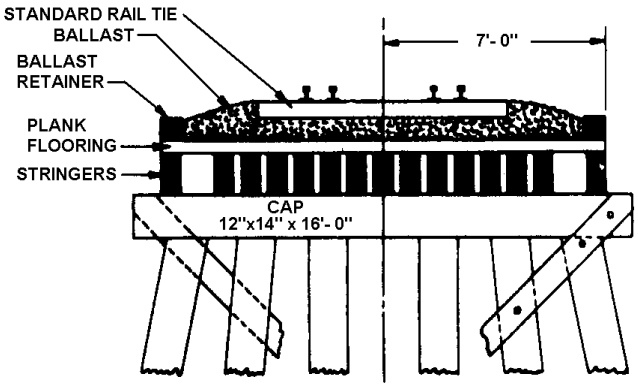

TRESTLE DECK SYSTEMS - REVERSE SIDE

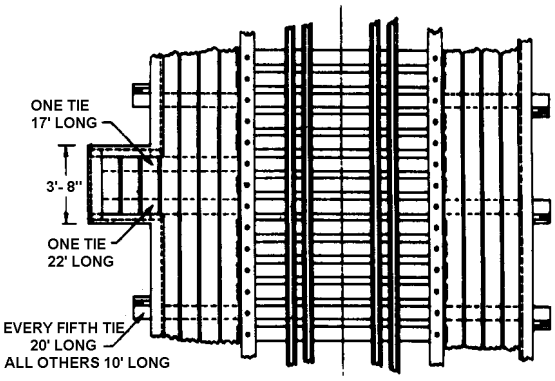

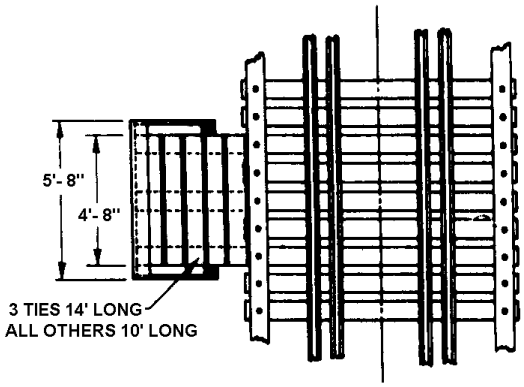

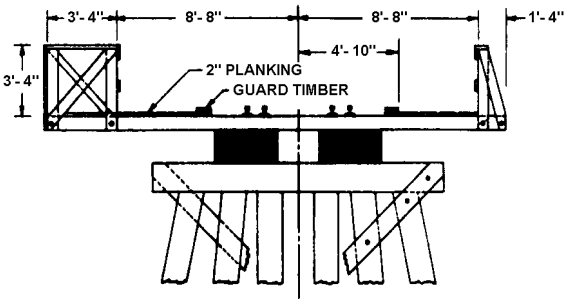

WALKWAYS AND BARREL PLATFORM

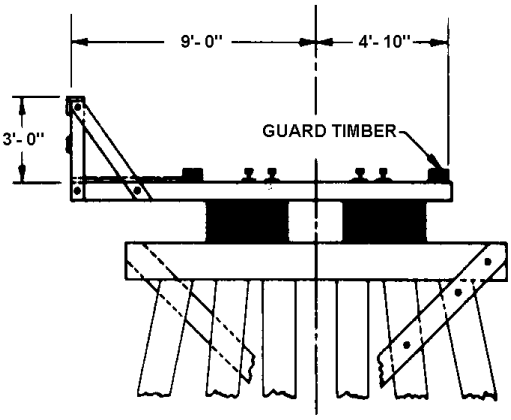

REFUGE PLATFORM